Appendix E

Dow Product Brochure, *Acetone: The Versatile, High Solvency Intermediate*

Dow Plastics

DOW ACETONE

THE VERSATILE, HIGH SOLVENCY INTERMEDIATE

DOW ACETONE

Contents

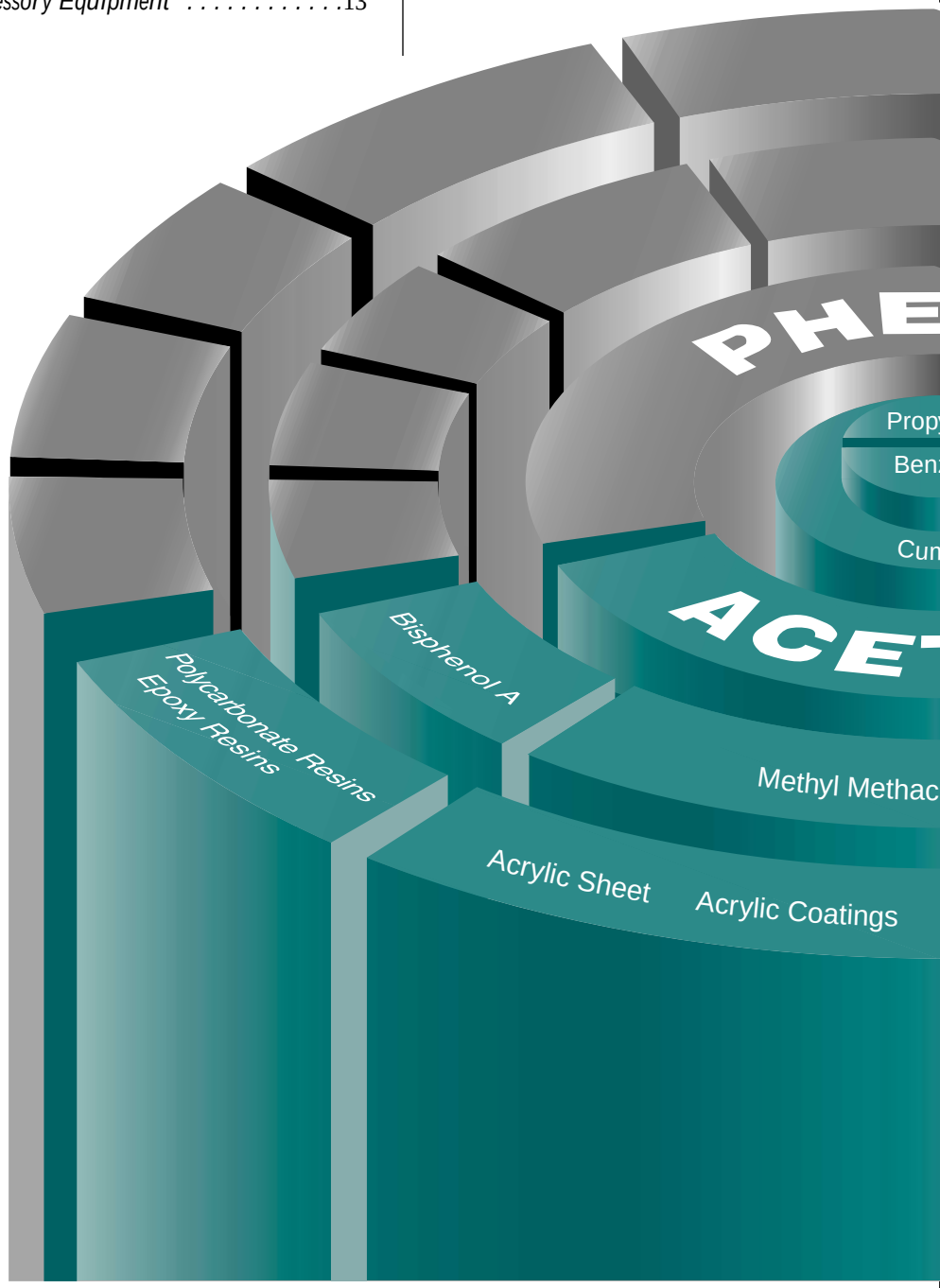

INTRODUCTION

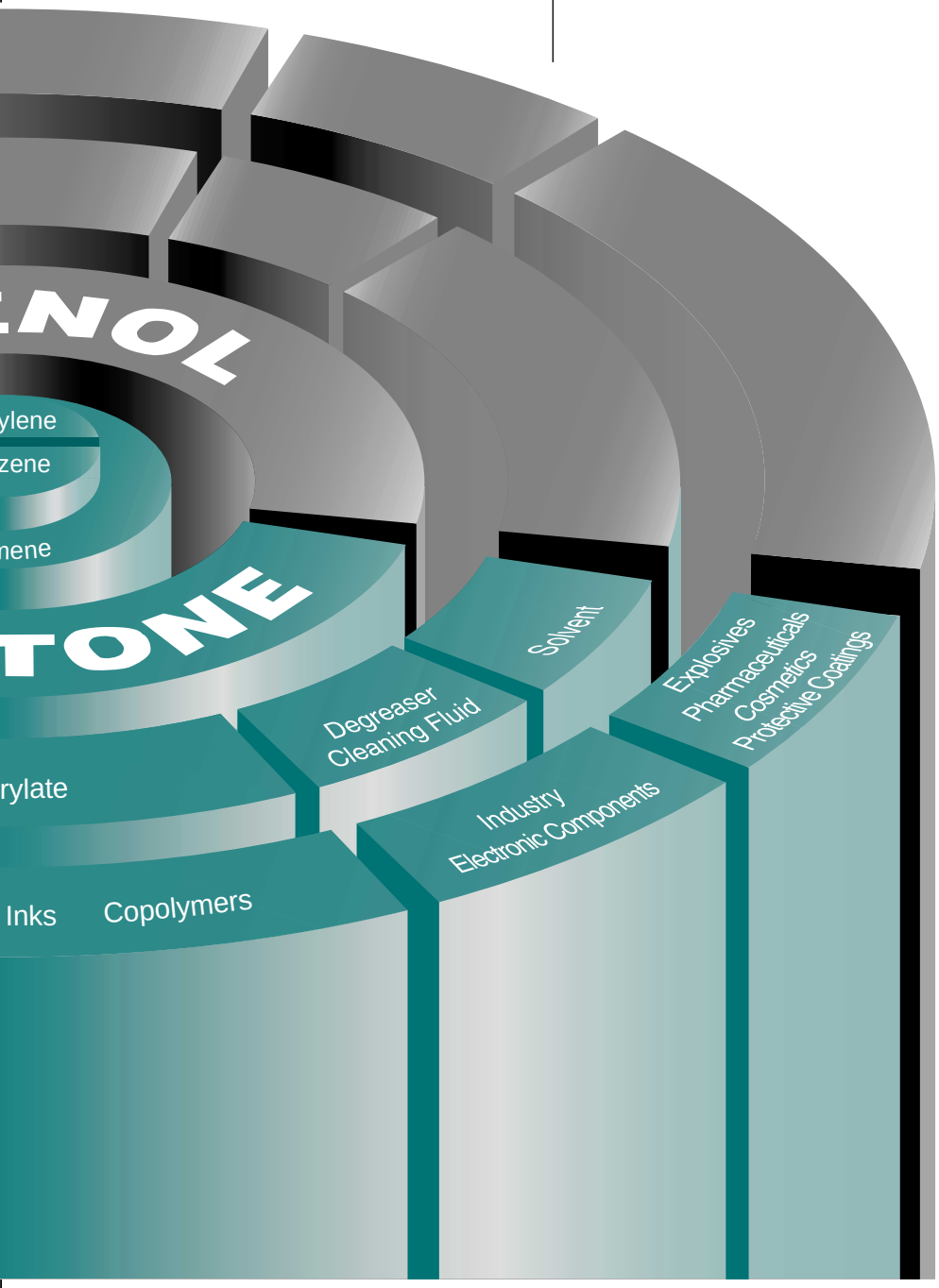

Acetone (also known as dimethyl ketone and 2-propanone) is a clear, colorless, low-boiling, flammable, volatile liquid, characterized by rapid evaporation and a faintly aromatic, sweetish odor. It is readily miscible in most organic solvents and completely miscible, in all proportions, in water.

Acetone is both the simplest and most important of the aliphatic ketones. It is an excellent solvent for a wide range of gums, resins, waxes, fats, greases, oils, dyestuffs and cellulosics.

It is widely used as a chemical intermediate in the production of methyl isobutyl ketone and other solvents, and in the production of such important chemicals as bisphenol A and methyl methacrylate. It is also used in the manufacture of a wide variety of coatings and plastics.

In an effort to continue to support Dow's commitment to Responsible Care® we are providing this brochure to our customers. This brochure discusses physical and chemical properties, applications and recommendations for safe handling, use and storage of acetone.

For more information, contact the Dow Customer Information Group at 1-800-441-4369 or 517-832-1426, or visit our website: www.dowepoxy.com.

®Responsible Care is a registered Service Mark of the Chemical Manufacturers Association.

USES

As A Solvent

Surface Coatings, Films And Adhesives

As a solvent, acetone is frequently incorporated in solvent systems or "blends," especially as the low-boiling component of "high-low" blends. Many of these acetone-solvent blends are used in the formulation of "high-solids" cellulose ester lacquers for automotive and furniture finishes. They also are used in acrylic automotive lacquers, particularly when the acrylics are modified with nitrocellulose. Acetone, which has a dilution ratio of 4.5, may be used to reduce the viscosity of lacquer solutions.

Significant amounts of acetone are used in the manufacture of cellulose acetate films and in the casting of photographic films and plates. Acetone is used as a solvent for vinylidene chloride-acrylontrile coating resins, permitting barrier coatings as thin as 0.1 mil to be applied with ease to various films and foils. The high volatility and consequent cooling effect of this solvent are especially desirable if the substrate is heat sensitive. Acetone is widely used as a solvent in the polyester resin industry, as both a resin thinner and for clean up operations. It is also used frequently in paper coatings and as a solvent for inks.

Acetone is included in the solvent systems of general purpose nitrocellulose cements and neoprene industrial adhesives. It is used as the basic solvent for nitrocellulose heat-seal coatings, as the primary solvent in vinyl-type grease resistant heat-seal coatings, and in pressure-sensitive chlorinated rubber adhesives. Acetone-based cements may be used to provide an effective bond for cellulose ethers.

Cleaning Fluids

Acetone is widely used in the textile industry for degreasing wool and degumming silk. Also, large quantities are used in paint, lacquer, and varnish stripping compounds, and in nail polish removers. In addition, acetone is used as an efficient degreasing agent for cleaning electronic components and vacuum tubes.

Other Solvent Uses

Other solvent uses include preparation of explosives, manufacture of cellulose acetate fibers, and formulation of denatured alcohol. Since acetone absorbs many times its own volume of acetylene gas, it is possible to ship acetylene safely in cylinders by using acetone as the solvent. Acetone also finds many applications as a drying agent, as an extracting or purifying agent, and as a foam-blowing agent, replacing halocarbons for some industrial applications.

As A Chemical Intermediate

The amount of acetone used annually in the production of other chemicals is increasing. For example, the production of derivative solvents now accounts for approximately one-third of total acetone usage. Large amounts are also used in the production of methacrylates and bisphenol A, and in the production of acetone amines, which serve as antioxidants for rubber, ketone, and various cosmetic products.

Figure 1
Acetone Flow Chart

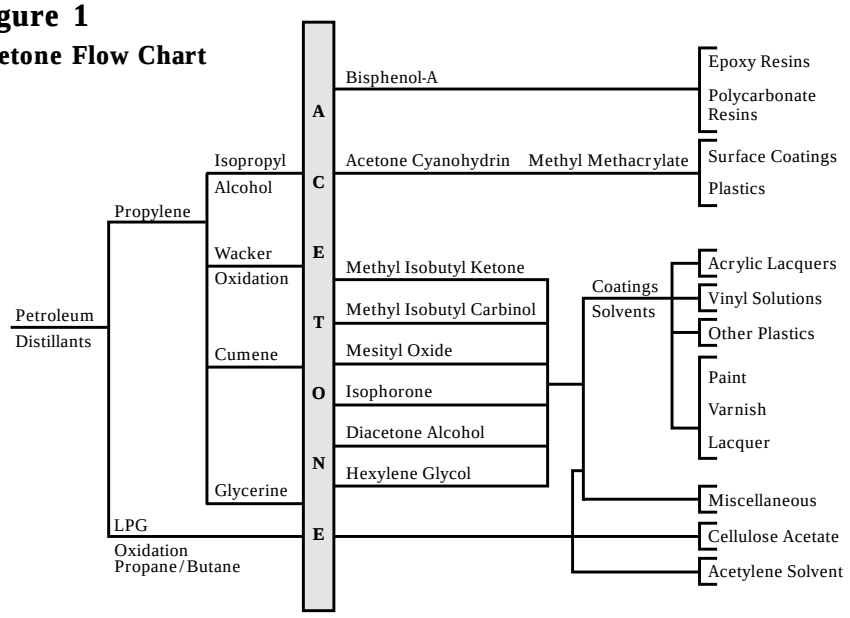

Properties of Acetone

Table 1 Typical Properties Of Acetone

Properties	Value
Structural formula	$CH_3 - \overset{\overset{O}{\|}}{C} - CH_3$
Molecular weight	58.079
Appearance	Colorless liquid
Odor	Pleasant, faintly aromatic, sweetish
Specific gravity at 25/25°	0.7880
Melting point, °C	-94.6
Boiling point at 760 mm Hg, °C	56.13
Vapor pressure at 20°C, mm Hg	181.7
Density at 20°C, g/ml	0.7898
lb/gal	6.59
Refractive index n20/D	1.359
Heat of vaporization, Kcal/mole at 760 mm and 56.1°C	7.092
Viscosity at 25°C, cps	0.3075
Flash point (closed cup), °C, (approx)	-20.0
Flash point (open cup), °C, (approx)	-9.0
Autoignition temperature, °C	465
Flammable limits at 25°C, vol. %	2.6 - 12.8
Electrical conductivity, 25°C, $ohm^{1}cm^{1}$	5.5×10^{8}
Heat of combustion, Kcal/mole	427

Note: These are typical properties; not to be construed as specifications.

Viscosity of Acetone

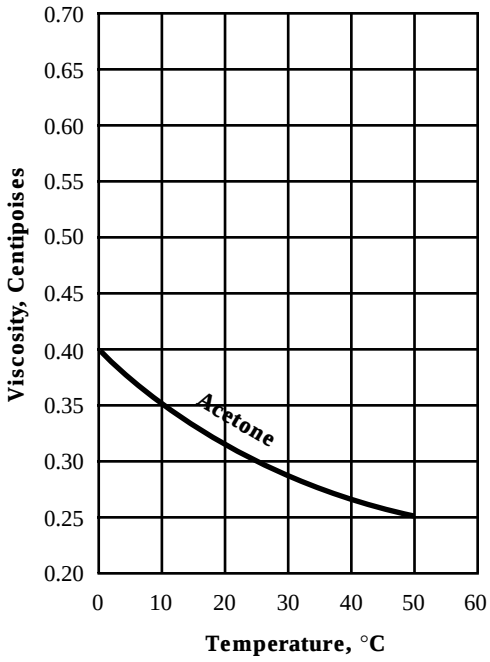

Vapor Pressure Of Acetone

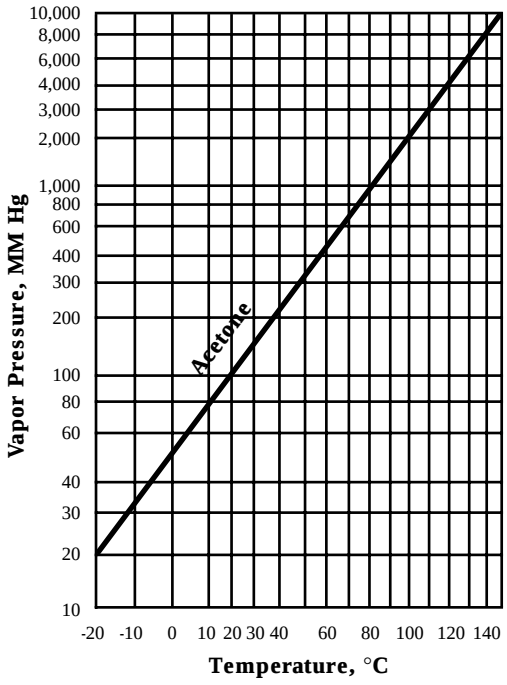

Table 2 **ASTM D 329 Requirements, Acetone**

Test Items	Limits
Specific gravity @ 20/20°C	0.7910-0.7930
Color (Pt-Co Scale), max	5
Distillation range at 760 mm Hg	Within 1.0°C including the temperature 56.1°C
Nonvolatile matter, max	0.005 g/100 ml
Odor	Characteristic, non-residual
Water (by weight), max	0.5% *(Ensures miscibility within 19 volumes 99% heptane at 20°C, without turbidity)*
Acidity (free acid as acetic, by wt.), max	0.002% *(Eq of 0.019 mg KOH/g)*
Water solubility	Miscible with distilled water in all proportions
Alkalinity (as ammonia, by wt.), max	0.001%
Permanganate test (added $KMnO_4$)min	Retain color 30 min. at 25°C in the dark

Note: These are typical properties; not to be construed as specifications.

Typical Solvent Systems With Acetone

1. Nitrocellulose lacquer – automotive

a. 30% butyl acetate
10% n-butyl alcohol
60% toluene

b. 25% methyl isobutyl ketone
5% higher boiling ketone
10% methyl isobutyl carbinol
60% toluene

2. Nitrocellulose lacquer – house furniture

a. Conventional lacquer
15% acetone
15% methyl ethyl ketone
6% isopropyl alcohol
6% butyl alcohol
58% toluene or xylene

b. Warm spray
5% methyl ethyl ketone
10% acetone
15% methyl isobutyl ketone
10% butanol
60% toluene

c. Kitchen cabinet type
10% methyl ethyl ketone
15% methyl isobutyl ketone
5% methyl isoamyl ketone
20% butyl alcohol
10% methyl isobutyl carbinol
40% toluene

d. TV cabinet type
30% acetone
10% methyl ethyl ketone
15% methyl isobutyl carbinol
45% toluene

3. Enamels – automobile

5% isopropyl alcohol
17% butanol
78% xylene

4. Polyvinyl chloride – automotive

a. 75% methyl isobutyl ketone
25% toluene

b. (Industrial maintenance)
13% methyl ethyl ketone
37% methyl isobutyl ketone
50% toluene

5. Thermoplastic acrylic – automotive

20% acetone
30% other ketones
10% latent solvent
20% toluene
20% xylene

6. Thermosetting acrylic – automotive

5% ketone
45% aliphatic hydrocarbons
50% aromatic hydrocarbons

Typical Materials Dissolved By Acetone

Gums, waxes and natural resins

- Colophony
- Coumarone
- Coumarone-Indene
- Dammar (dewaxed)
- Elemi
- Manila
- Pontianac
- Rosin
- Sandarac

Rubbers and polymers

- Alkyd, Non-drying Type
- Alkyd, Maleic Modified
- Alkyd, Maleic–Rosin Modified
- Cellulose Acetate
- Cellulose Acetate Butyrate (Low Butyryl)
- Cellulose Acetate Butyrate (High Butyryl)

Rubbers and polymers - cont.

- Cellulose Acetate Propionate (Low Propionyl)
- Cellulose Acetate Propionate (High Propionyl)
- Chlorinated Diphenyl
- Epoxy
- Ethyl Cellulose
- Methyl Methacrylate
- Nitrocellulose
- Phenolic
- Polyurethane
- Polyvinyl Acetate
- Urea-Formaldehyde
- Vinyl Chloride-Vinyl Acetate Copolymer
- Vinyl Chloride-Vinyl Acetate Copolymer, Maleic Modified
- Vinyl Chloride-Vinyl Acetate Copolymer, Vinyl Alcohol Modified
- Vinyl Chloride-Vinylidene Chloride Copolymer
- Vinylidene Chloride-Acrylonitrile Copolymer

Synthetic resins

- Acrylonitrile-Butadiene (NBR)

Oils

- Almond
- Castor
- Chinawood (Tung)
- Coconut
- Cottonseed
- Fish
- Linseed
- Mineral
- Pine
- Rapeseed
- Soybean

Specific Gravity Of Acetone

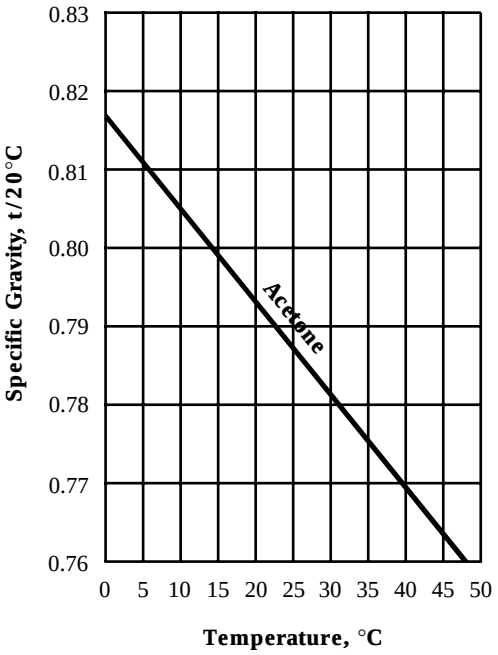

Surface Tension Of Acetone

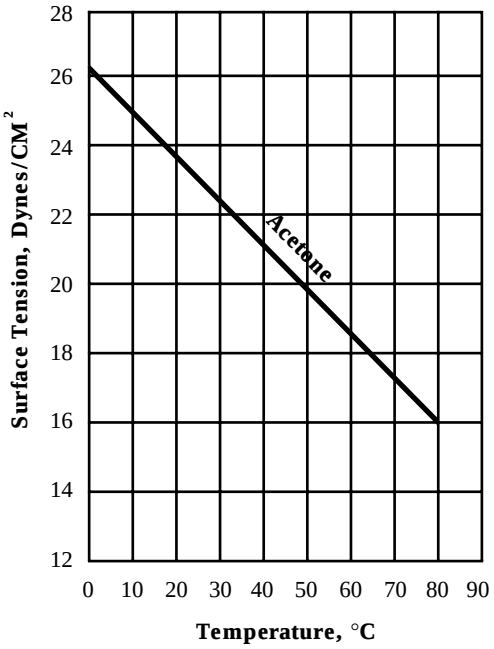

Table 3 Pounds Of Acetone Per U.S. Gallon At Various Temperatures

°F	lbs.	°F	lbs.	°F	lbs.	°F	lbs.	°F	lbs.
--20.0	7.044	10.4	6.888	41.0	6.732	71.6	6.575	102.0	6.420
-19.0	7.039	11.0	6.885	42.0	6.727	72.0	6.573	102.2	6.419
-18.4	7.036	12.0	6.880	42.8	6.723	73.0	6.568	103.0	6.415
-18.0	7.034	12.2	6.879	43.0	6.722	73.4	6.566	104.0	6.410
-17.0	7.029	13.0	6.875	44.0	6.717	74.0	6.563	105.0	6.405
-16.6	7.026	14.0	6.870	44.6	6.713	75.0	6.558	105.8	6.400
-16.0	7.023	15.0	6.865	45.0	6.711	75.2	6.557	106.0	6.399
-15.0	7.018	15.8	6.861	46.0	6.706	76.0	6.553	107.0	6.394
-14.8	7.017	16.0	6.860	46.4	6.704	77.0	6.548	107.6	6.391
-14.0	7.013	17.0	6.855	47.0	6.701	78.0	6.543	108.0	6.389
-13.0	7.008	17.6	6.852	48.0	6.696	78.8	6.539	109.0	6.384
-12.0	7.003	18.0	6.850	48.2	6.695	79.0	6.538	109.4	6.382
-11.2	6.999	19.0	6.844	49.0	6.691	80.0	6.532	110.0	6.379
-11.0	6.998	19.4	6.842	50.0	6.686	80.6	6.529	111.0	6.374
-10.0	6.993	20.0	6.839	51.0	6.681	81.0	6.527	111.2	6.373
-9.4	6.990	21.0	6.834	51.8	6.677	82.0	6.522	112.0	6.369
-9.0	6.988	21.2	6.833	52.0	6.676	82.4	6.520	113.0	6.364
-8.0	6.982	22.0	6.829	53.0	6.671	83.0	6.517	114.0	6.359
-7.6	6.980	23.0	6.824	53.6	6.667	84.0	6.512	114.8	6.354
-7.0	6.977	24.0	6.819	54.0	6.665	84.2	6.511	115.0	6.353
-6.0	6.972	24.8	6.815	55.0	6.660	85.0	6.507	116.0	6.348
-5.8	6.971	25.0	6.814	55.4	6.658	86.0	6.502	116.6	6.345
-5.0	6.967	26.0	6.809	56.0	6.655	87.0	6.497	117.0	6.343
-4.0	6.962	26.6	6.806	57.0	6.650	87.8	6.493	118.0	6.338
-3.0	6.957	27.0	6.803	57.2	6.649	88.0	6.492	118.4	6.336
-2.2	6.953	28.0	6.798	58.0	6.645	89.0	6.486	119.0	6.333
-2.0	6.952	28.4	6.796	59.0	6.640	89.6	6.483	120.0	6.328
-1.0	6.947	29.0	6.793	60.0	6.635	90.0	6.481	120.2	6.327
-0.4	6.944	30.0	6.788	60.8	6.631	91.0	6.476	121.0	6.323
0	6.942	30.2	6.787	61.0	6.630	91.4	6.474	122.0	6.318
1.0	6.936	31.0	6.783	62.0	6.624	92.0	6.471	123.0	6.313
1.4	6.934	32.0	6.778	62.6	6.621	93.0	6.466	123.8	6.308
2.0	6.931	33.0	6.773	63.0	6.619	93.2	6.465	124.0	6.307
3.0	6.926	33.8	6.769	64.0	6.614	94.0	6.461	125.0	6.302
3.2	6.925	34.0	6.768	64.4	6.612	95.0	6.456	125.6	6.299
4.0	6.921	35.0	6.763	65.0	6.609	96.0	6.451	126.0	6.297
5.0	6.916	35.6	6.760	66.0	6.604	96.8	6.447	127.0	6.292
6.0	6.911	36.0	6.757	66.2	6.603	97.0	6.445	127.4	6.290
6.8	6.907	37.0	6.752	67.0	6.599	98.0	6.440	128.0	6.287
7.0	6.906	37.4	6.750	68.0	6.594	98.6	6.437	129.0	6.282
8.0	6.901	38.0	6.747	69.0	6.589	99.0	6.435	129.2	6.281
8.6	6.898	39.0	6.742	69.8	6.585	100.0	6.430	130.0	6.277
9.0	6.896	39.2	6.741	70.0	6.584	100.4	6.428		
10.0	6.890	40.0	6.737	71.0	6.578	101.0	6.425		

Table 4 Solvent Properties

The following properties of acetone are pertinent to the formulation of coatings.

Pounds per gallon, 20°C (68°F)	6.594
Gallons per 100 pounds 20°C (68°F)	15.15
Relative evaporation rate (n-butyl acetate = 100)	1160
Flash Point, tag open cup, °F	15
Blush resistance, percent relative humidity at 80°F	30
Toluene dilution ratio	4.5
Naptha dilution ratio	0.7

SAFETY CONSIDERATIONS

Potential Health Effects

Eye:
May cause moderate eye irritation which may be slow to heal. May cause moderate corneal injury. Vapors may irritate eyes.

Skin Contact:
Prolonged exposure not likely to cause significant skin irritation. May cause drying or flaking of skin. Did not cause allergic reaction when tested in guinea pigs.

Skin Absorption:
A single prolonged exposure is not likely to result in the material being absorbed through skin in harmful amounts.

Ingestion:
Single dose oral toxicity is considered to be extremely low. No hazards anticipated from ingestion incidental to normal handling operations.

Inhalation:
A single brief (minutes) inhalation exposure is not likely to cause adverse effects. Excessive exposure may cause respiratory irritation and central nervous system depression.

Signs and symptoms of central nervous system depression, in order of increasing exposure, are headache, dizziness, drowsiness and incoordination.

Systemic (Other Target Organ) Effects:
Signs and symptoms of excessive exposure may be anesthetic or narcotic effects. Repeated excessive exposures to smaller amounts may cause irritation to eyes and respiratory tract. In animals, has been shown to cause kidney effects and has been shown to cause liver, blood and testicular effects only at very high doses.

Cancer Information:
Did not cause cancer in long-term animal studies.

Teratology (Birth Defects):
Birth defects are unlikely. Exposures having no effect on the mother should have no effect on the fetus. Did not cause birth defects in animals; other effects were seen in the fetus only at doses which caused toxic effects to the mother.

Reproductive Effects:
In animal studies, has been shown not to interfere with reproduction.

Toxicity

Acetone has low toxicity potential relative to other commonly used industrial solvents. There have been no confirmed reports that prolonged inhalation of low vapor concentrations results in any chronic effects in people. High vapor concentrations may produce anesthesia and may be irritating to the eyes, nose and throat. Also, direct contact of acetone with the eyes may produce moderate irritation and moderate corneal injury; prolonged or repeated skin contact with the liquid may cause mild irritation.

Guidelines For Vapor Control

The American Conference of Governmental Industrial Hygienists (ACGIH) has adopted a 500 ppm Threshold Limit Value (TLV) for acetone for an 8-hour Time Weighted Average (TWA) exposure and a STEL (Short Term Exposure Limit) of 750 ppm. The Occupational Safety and Health Administration PEL (Permissible Exposure Limit) for acetone is 1000 ppm.

Note: The odor of acetone has been variously described as pleasant, fruity, fragrant, faintly aromatic or like wood smoke. Regardless, odor should not be relied upon as a warning against possible overexposure.

Precautions For Safe Handling And Use

Since the individual circumstances under which acetone may be used are beyond the control of The Dow Chemical Company, the following recommendations for safe handling and use of this material are necessarily general in nature. For more information on the safe handling and use of this product, please contact one of the sources listed on the back cover of this brochure. Also, assistance in evaluating particular plant conditions may be obtained from consulting laboratories and from state departments of health or labor, many of which offer industrial hygiene services. Ultimately it is the responsibility of the owner and/or the operator of each facility to ensure proper, safe handling of the acetone.

Personnel Protection

1. Maintain a current Material Safety Data Sheet (MSDS) on acetone. We as producers have a regulatory obligation under OSHA Hazard Communication Standard to provide an MSDS at the time of order and a revised MSDS with each subsequent shipment. Distributors are obligated to pass on the MSDS. Consult it for up-to-date information on physical properties, toxicity and handling recommendations.

2. Read and follow carefully all current label directions and precautions.

3. Keep atmospheric concentrations at or below those listed under "Guidelines For Vapor Control" above. Note: Where engineering methods for controlling exposure levels are not feasible, wear a NIOSH-approved respirator. For emergencies, wear a NIOSH-approved self-contained positive-pressure breathing apparatus or a full-face respirator.

4. Avoid direct contact with the liquid. If repeated skin contact is unavoidable, an apron and neoprene rubber gloves (which are temporarily impermeable to acetone) should be worn.

5. Use chemical goggles to help prevent direct eye contact. If vapor causes eye discomfort, use a full-face respirator.

Note: Do not use acetone with certain active chlorine compounds without special regard for the possible formation of toxic chloroketones.

First Aid

The chance of exposure to acetone can be minimized by careful attention to industrial hygiene and adherence to safe work practices. However, plant personnel should be prepared to give effective first aid in the event of accidental spills or exposure.

Inhalation

- Remove the affected person immediately from the contaminated area to fresh air. Keep person warm and quiet.
- Call a physician at once or transport to a medical facility.
- If breathing stops give artificial respiration. If breathing is difficult, oxygen should be administered by qualified personnel.

Skin Contact

- Remove all contaminated clothing immediately and wash skin thoroughly with water for at least 15 minutes.
- Wash clothing before reuse.
- If skin irritation or injury develops, seek medical attention.

Eye Contact

- Flush the eyes immediately and continuously with plenty of flowing water for at least 15 minutes.
- Seek medical attention immediately.

Ingestion

- Call a physician at once. Do not induce vomiting unless directed by medical personnel. *Never give fluids or induce vomiting if patient is unconscious or having convulsions.*

Safe Handling and Storage

Spills And Disposal

Wear appropriate safety equipment (see "Precautions For Safe Handling And Use," p. 8). Keep spills away from heat, sparks or flames. Soak up the acetone with an absorbent material and scoop into drums. Large spills should be diked and pumped into grounded drums using air-operated or other non-spark-producing pump. Prevent acetone from entering drains and sewers.

In disposal of any wastes, be certain all applicable federal, state/provincial and local regulations are met.

Note: Although acetone is noncorrosive to metals, it will dissolve many plastics.

Fire And Explosion

Since acetone is a flammable liquid, with closed cup flashpoint of -20°C (-4°F), it must be kept away from heat, sparks or flames. It should be used with adequate ventilation and stored in closed containers. Fires may be controlled with carbon dioxide, dry chemical extinguishers or alcohol foam. Water can be used to cool fire-exposed containers, to protect personnel, and to disperse vapors and spills. Fire fighters should wear protective clothing and a NIOSH-approved self-contained positive-pressure breathing apparatus.

The flammable limit at room temperature is between 2.6 and 12.8 volume percent acetone vapor in air. Acetone may react vigorously with certain oxidizing agents such as chromic acid and alkaline potassium permanganate. Acetone concentrations as low as 1% in water can potentially produce a flammable headspace.

Note: Violent reaction with NAOH can cause high pressure and reaction products.

Unloading and Storage

Table 5

Type of Container	Net Weight (approx) lbs.
Rail	
30,000 gallon carbon steel tank cars (lined)	190,000
Trucks	
7,000 gallon stainless steel	46,000
Barges	2,800,000

Shipping Information

Dow ships acetone in tank truck, tank car and barge quantities as shown above.

Acetone is classified as "Flammable Liquid" by the Department of Transportation and its shipment, including loading and unloading, is subject to DOT Hazardous Materials Regulations. Further, certain state, municipal and insurance company regulations also may apply to acetone shipping and handling operations.

Distribution Emergency Response

Distribution Emergency Response (E/R) is the Dow system for advising and assisting carrier, warehouse, terminal or public emergency service personnel when they are confronted with an emergency which occurs in the distribution of Dow products. E/R is a part of Dow's commitment to Product Stewardship. Through E/R, timely advice can be provided in an emergency.

E/R distribution emergency response system

Call: 517-636-4400

CHEMTREC

IN AN EMERGENCY CALL CHEMTREC DAY OR NIGHT

800-424-9300

Toll-Free

Unloading

Unloading personnel should be familiar with general tank car and tank truck equipment, thoroughly instructed as to the hazardous properties of acetone, and trained in the proper use of required protective equipment.

The acetone storage tank should have an inert gas (nitrogen) pad. This receiving tank should be vented back to the tank car or tank truck by means of a line from the top of the storage tank to the tank car or tank truck (see Storage). This closed loop system prevents exposure to personnel and the formation of potentially explosive mixtures.

Transfer of the acetone from the tank car or tank truck can then be accomplished by means of a pump (preferably the customer's pump). Both the tank car or tank truck and the transfer pump must be grounded.

Acetone Tank Truck Unloading Procedure

A written job procedure on unloading tank trucks of acetone should be provided to anyone performing this operation. The following procedure gives minimum requirements for unloading tank trucks of acetone.

1. Emergency respiratory equipment, a safety shower and eye bath, a fire extinguisher and the necessary personal protective equipment should be available to persons unloading tank trucks of acetone.

2. Visually check area for leaks and other hazards. Remove all obstructions.

3. Spot truck. Secure keys and/or placard wheel.

4. Check wheels and hook up ground cable.

5. Inspect truck. Check all truck openings for tight seal. Check all valves and gaskets in quick fits. Visually check trucks for other hazards. CAUTION: Do not walk or work on top of tank truck without platform and handrails or life line to prevent falls.

6. Through the loading hatch on top of the tank truck, collect a small sample and analyze to verify contents of the truck. Be sure to use safety equipment (neoprene rubber gloves, monogoggles, respirator, spark proof tools and sample tongs). Take sample from the dome of the truck.

After The Sample Is Identified:

7. The acetone storage tank should have an inert gas pad. This receiving tank should be vented back to the tank truck by means of a line from the top of the tank to the tank truck.

Figure 2

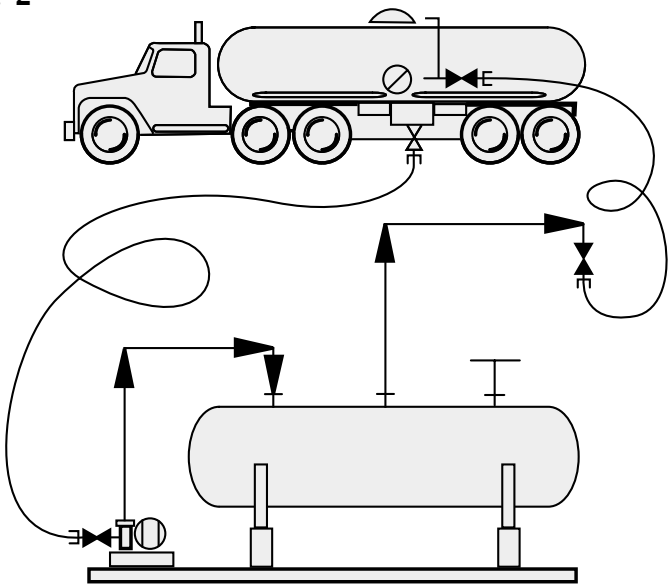

8. Connect the unloading hoses. *Note: This completes the closed loop system. See figure 2.*

9. Line up all valves at truck and tank.

10. Notify operations of transfer.

11. Obtain accurate tank readings. Check to make sure tank will hold truck contents, then start pumping. Limit the pumping rate of the plant pump or truck to a level which will prevent a vacuum from developing in the tank truck.

12. Double check lines, truck and tank for leaks and/or proper line up. One person must be within 25 feet of truck while unloading.

13. When truck is empty, shut off pump, isolate tank truck from storage tank and then close or open appropriate valves.

14. Transfer hose must be bled down before any attempt to disconnect. After pressure is bled off, disconnect hose and vent line.

15. Remove all wheel chocks, ground cable, and return key. Do not reverse placards.

16. Release truck.

Acetone Tank Car Unloading Procedure

1. Spot tank car at unloading site. To guard the unloading operation, put up blue flag stop signs (use blue light after dark) and set derails. Prohibit all spark-producing, welding or open flame operations within 200 feet of unloading operation. Be sure tank car is grounded.

2. To prevent the car from possible drifting while loading is being performed, secure the wheels with chocks and set vehicle brake.

3. Check the outlet valve to see that it is closed and remove the plug. CAUTION: There may be product trapped between the valve and plug. Wear monogoggles, neoprene rubber gloves and neoprene rubber boots.

4. Secure material sample from car and analyze for *positive identification* of product prior to unloading. **CAUTION:** Monogoggles, neoprene rubber boots, neoprene rubber gloves, sample tongs and respirator should be used when sampling.

5. Check tank car loaded volume and verify that receiving tank will not be overfilled.

6. Connect unloading line to tank car outlet valve and line up piping system for transfer.

7. Connect inert gas (nitrogen recommended) pad to 1" vent valve on top of car. This is to keep air from entering car and to prevent a vacuum in car during unloading. Pad pressure should be controlled by regulator at a valve well below pressure rating of tank car - 25 psig maximum.

8. If material is to be pumped from car, an alternate method of venting is to connect the tank car vent outlet with an adequately sized line back to the receiving tank. In this case, no separate gas system is required.

9. Open tank car off-loading valve and start product transfer to receiving tank. Check entire system for leaks, particularly where connections were made. Tank car must be in sight of one person while unloading.

10. When tank car is empty, close off appropriate valves on liquid and inert gas pad to tank and record final level to allow calculations on amount received. Tank car pressure should be vented and dome opened to inspect car for product heels before releasing.

11. Disconnect all lines and fittings from tank car. Monogoggles, neoprene rubber gloves and neoprene rubber boots should be used and a respirator should be readily available. Replace screwed plugs in vent and product outlet valves.

12. Disconnect grounding lines, remove wheel chocks and release brake.

13. Make sure all ramps and lines are clear of tank car.

14. Take down blue flag stop signs and deactivate derails.

Figure 3

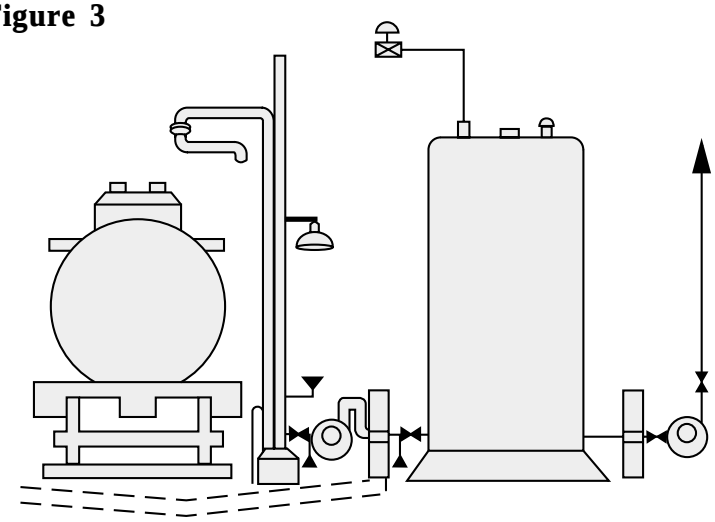

Storage

Carbon steel tanks of welded construction, as specified in the API (American Petroleum Institute) Standard 650 (1977 Edition, Paragraphs 3.5.2e1, 3.5.2e3) are recommended for acetone service. The design should be positive-pressure, plus 6" water, minus $^1/_2$ ounce.

Recommended gaskets include 316 stainless steel perforated tang reinforcement encapsulated in pure graphite sheet such as Durabla FGT 316 gasket laminates, Grafoil GH™E gasket laminates from UCAR Carbon Company Inc. or Graph-Lock 3125TC gasket laminates from Garlock. Gaskets made of PTFE may also be used.

Additional design considerations are regulated by the National Fire Prevention Association Code 30. These considerations include location, method of sizing, emergency relief valve system, type of drainage diking and additional fire protection considerations. Consult local fire codes for additional fire protection requirements, which might include combustible gas monitors, location of fire monitor nozzles, or foam and sprinkling systems.

It has been the experience of The Dow Chemical Company that acetone can be stored satisfactorily in unlined carbon steel tanks. However, in cases where the purity of acetone is to be optimized, an inorganic zinc lining is recommended.

Acetone should be stored under an inert gas pad such as *nitrogen*. Carbon dioxide is *not recommended*. A blanketing or pad/depad system is recommended to maintain the inert atmosphere. The associated tank venting system is discussed in the section on accessory equipment.

Storage tanks containing acetone should be properly grounded. Pumps (see next section) utilized for both filling and removal of material from the tank should share a common ground with the tank. Locate these pumps outside the tank diking area.

To minimize the possibility of static charge build-up during filling of the tank, the following additional construction design is recommended.

The tank inlet nozzle should be at the bottom of the vessel with provisions to block and to drain piping. If the tank inlet nozzle is installed at the top of the tank side wall, a carbon steel tube located in the tank interior and directed to the tank bottom should be connected to the inlet nozzle. The carbon steel tube should then extend from the inlet nozzle to near the tank bottom, resting on supports on, but not welded to, the tank bottom. Acetone pumped into inlet nozzle will then flow through the interior tube and enter the tank contents at the tank bottom. A small hole should be drilled in the tube near the inlet nozzle to prevent a possible siphoning effect. The tank exterior should be painted a light, reflective color, such as white.

Local fire, pollution and any additional regulations affecting bulk handling and storage of acetone should be consulted.

Accessory Equipment

Pumps, motors and switch gear used for acetone service should conform to the specifications outlined in the National Electric Code, Class I, Division I, Group D, paragraphs 500 and 501.

The tank venting system should allow for compliance with local vapor emission standards and conform with National Fire Prevention Association recommendations. Sizing of pressure relief valves, vacuum relief valves, and emergency relief valves is outlined in the American Petroleum Institute Standard 2000 (1973 Edition). Factors such as “pumping-in” rate, thermal out-breathing, and potential “slug-in” of gas during tank loading should be considered in design of the relief valve. A flame arrester should be included in the venting system.

A mechanical or electronic tank leveling gauge is recommended.

Dow Product Stewardship

Dow encourages its customers and potential users of Dow products to review their applications of such products from the standpoint of human health and environmental quality. To help ensure that Dow products are not used in ways for which they are not intended or tested, Dow personnel will assist customers in dealing with environmental and product safety considerations. A Dow sales representative can arrange the proper contacts. Dow product literature, including MSDS, should be consulted prior to use of Dow products. These may be obtained by contacting the Dow Customer Information Group at 1-800-441-4369 or 517-832-1426 in the U.S. and Canada, or 95-800-441-4369 in Mexico.

Chemical Diversion And Trafficking Act

In 1988 the U.S. Congress enacted the Chemical Diversion and Trafficking Act to help prevent the diversion of certain chemicals that could be used in making illicit drugs. Under the Act, acetone is listed in the essential chemical category. The federal regulations impose certain record keeping and reporting requirements on companies that manufacture, sell, import or export the listed chemicals.

For additional information
in the U.S. and Canada, call the
Dow Customer Information Group at
1-800-441-4369 or 1-517-832-1426

In Mexico,
call 95-800-441-4369.

In Europe, contact the Dow Information Centre
in The Netherlands at ++31-20-6916268 (phone),
++31-20-6916418 (fax) or dicinfo@euronet.nl (e-mail).

In the Pacific area, call
the Dow Customer Service Center at
81-120-024394 (toll-free in Japan) or
81-3-5460-2114 (outside Japan).

In Brazil, call
the Dow Chemical Service Center at 55 11 51889367.

Visit our website: www.dowepoxy.com

Published March 2000

The Dow Chemical Company, 2040 Dow Center, Midland, MI 48674
Dow Chemical Canada Inc., 1086 Modeland Rd., P.O. Box 1012, Sarnia, Ontario, N7T 7K7, Canada
Dow Quimica Mexicana, S.A. de C.V., Torre Optima – Mezzanine, Av. Paseo de Las Palmas No. 405,
Col. Lomas de Chapultepec, 11000 Mexico, D.F., Mexico
Dow Europe S.A., Bachtobelstr. 3, CH-8810 Horgan, Switzerland
Dow Chemical Japan Ltd., Tennoz Central Tower,2-2-4 Higashi Shinagawa, Shinagawa-ku Tokyo 140-8617, Japan.
Dow Quimica S.A., Rua Alexandre Dumas, 1671, P.O. Box 9037, 01065-970 Sao Paulo, Brazil

Dow Plastics

254/9401

Form No. 115-00648-0300.pdf WC+M